MACAP®

Model
TG6

Evol.	Table	Date
1	1	01/01/2012

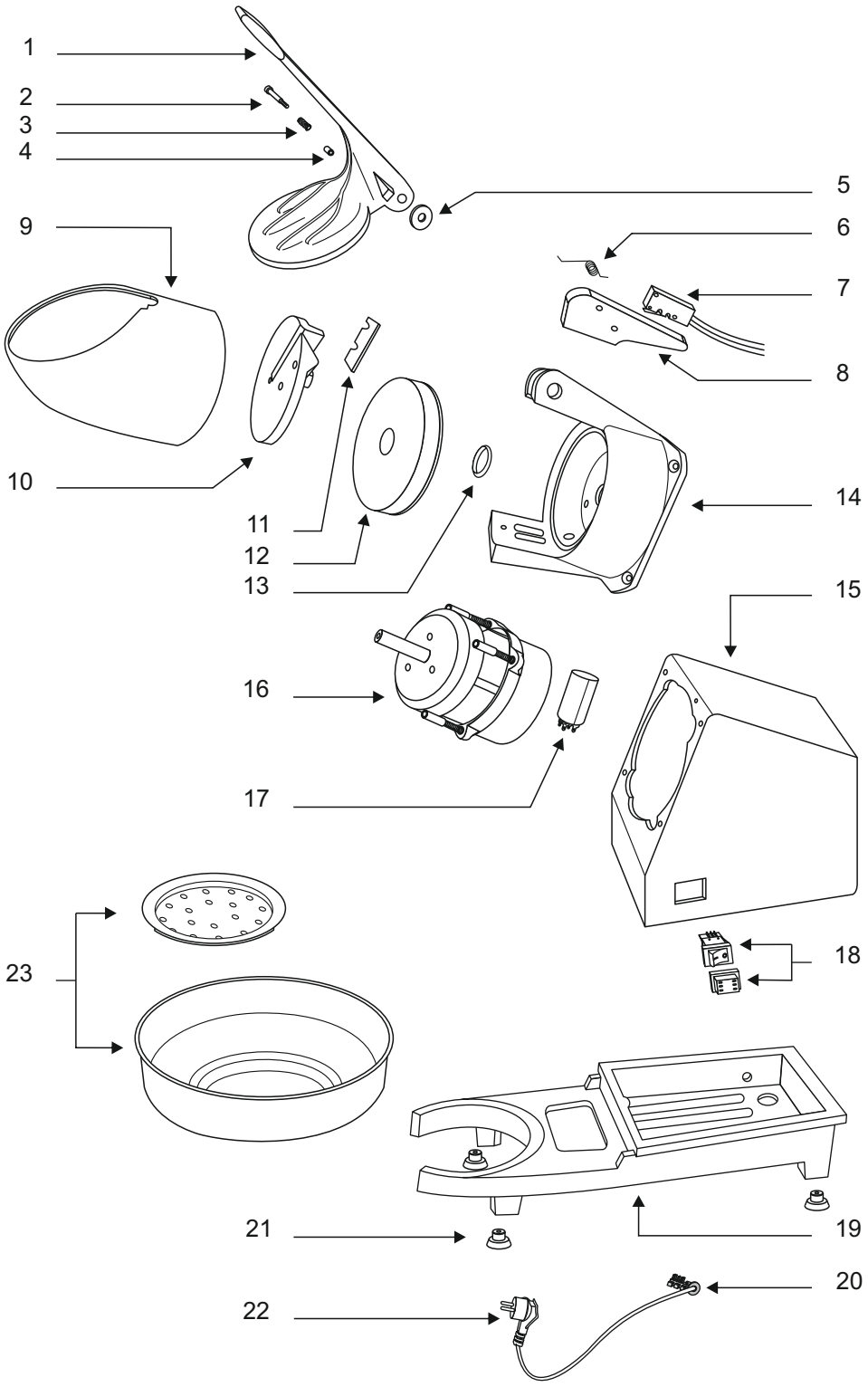

	N.	Code	Features
	1	C0003T404	
	2	C0004T814	
	3	C0008XX01	
	4	C00071615	
	5	C0004XX01	
	6	C0008T401	
	7	C00061024	
	8	C0007T401	
	9	C0003T401	
	10	C0003T403	
	11	C0004T406	
	12	C0004T407	
	13	C0007T402	
	14	C0001T406	
	15	C0001T407	
	16	C00061228	230V-50Hz
		C000612281	220V-60Hz
		C000612282	110V-60Hz
	17	C00061107	230V-50/60Hz
		C00061108	110V-60Hz
	18	C00061021	
	19	C0001T411	
	20	C00061611	
	21	C00071622	
	22	C00061517	SHUKO
		C000615171	USA
		C000615172	UK
		C000615173	SWITZERLAND
		C000615174	AUSTRALIA
		C000615175	BRAZIL
	23	C0004T405	

Descriptions	
	Available
	Not available

MACAP srl
Via Toniolo 18 - 30030 - Maerne - (VE) - Italy - Tel. +39 041 5030466 Fax +39 041 5030477
www.macap.it - www.dynamometrictamper.com - info@macap.it